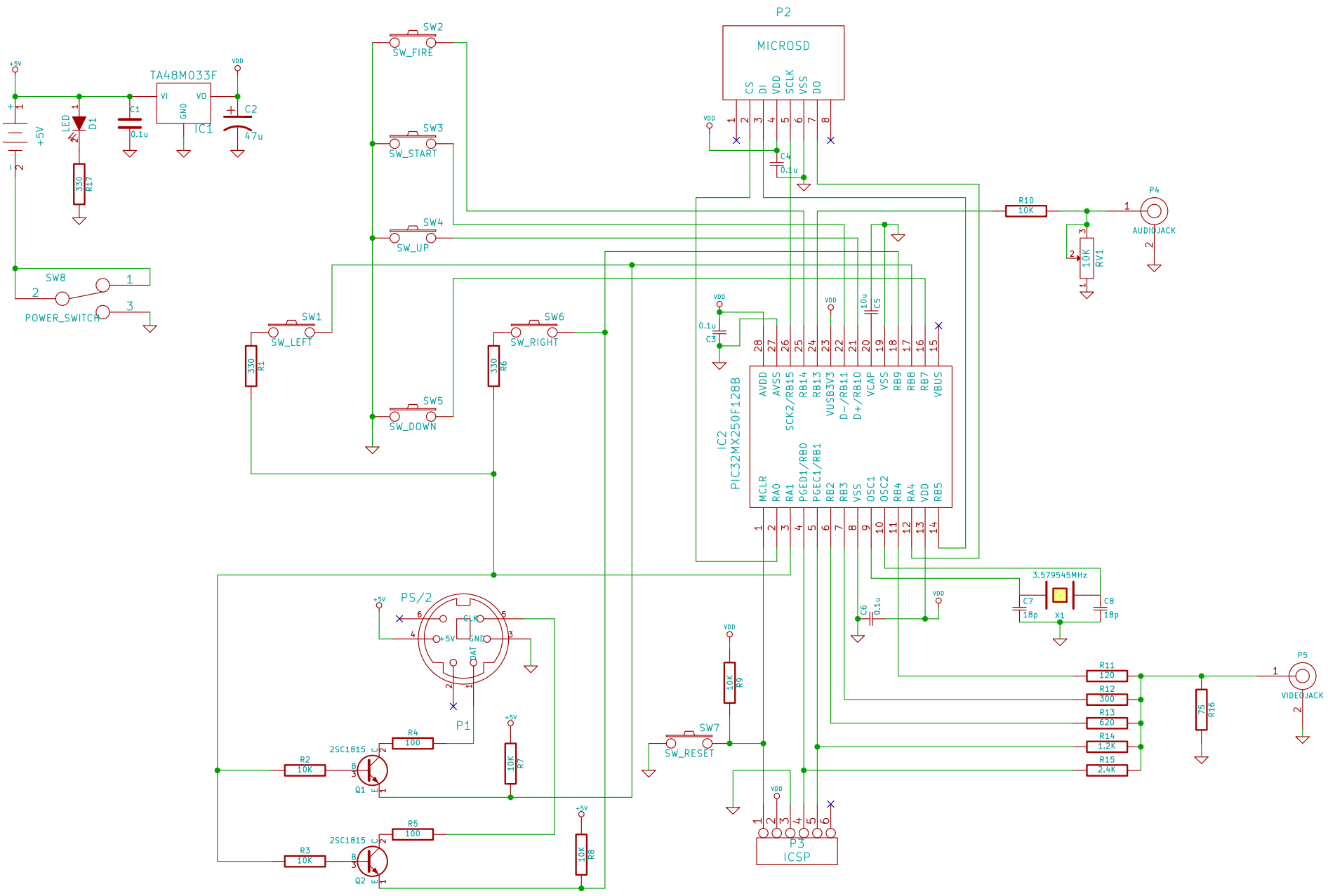
+5V
TA48M033F
VI
VO
GND
IC1
VDD
C1
0.1u
C2
47u
LED
D1
330
R17
SW8
POWER_SWITCH
SW1
SW_LEFT
SW2
SW_FIRE
SW3
SW_START
SW4
SW_UP
SW5
SW_DOWN
SW6
SW_RIGHT
330
R1
330
R6
P2
MICROSD
CS
DI
VDD
SCLK
VSS
DO
C4
0.1u
R10
10K
P4
AUDIOJACK
10K
RV1
C3
0.1u
C5
10u
IC2
PIC32MX250F128B
AVDD
AVSS
SCK2/RB15
RB14
RB13
VUSB3V3
D-/RB11
D+/RB10
VCAP
VSS
RB9
RB8
RB7
VBUS
MCLR
RA0
RA1
PGED1/RB0
PGEC1/RB1
RB2
RB3
VSS
OSC1
OSC2
RB4
RA4
VDD
RB5
3.579545MHz
C7
18p
X1
C8
18p
C6
0.1u
PS/2
CLK
+5V
GND
DAT
P1
R4
100
R2
10K
2SC1815
Q1
10K
R7
R5
100
R3
10K
2SC1815
Q2
10K
R8
10K
R9
SW7
SW_RESET
P3
ICSP
R11
120
R12
300
R13
620
R14
1.2K
R15
2.4K
75
R16
P5
VIDEOJACK